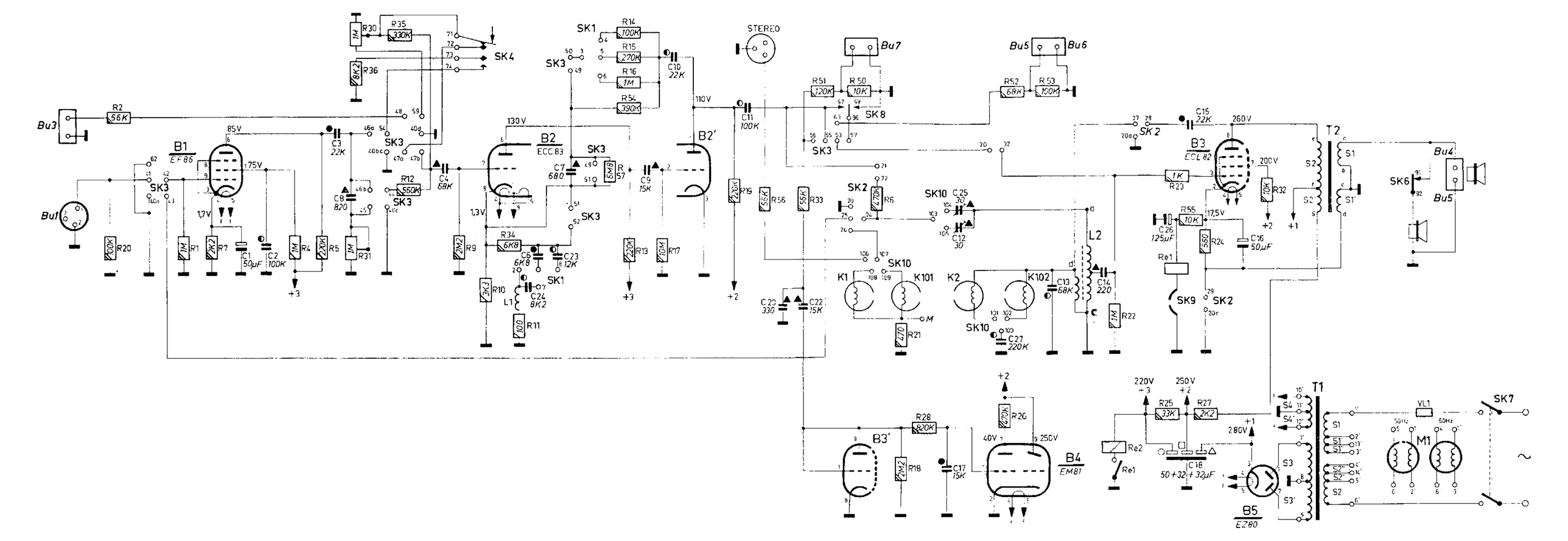
Bu3
R2
56K
Bu1
R20
100K
B1
EF86
85V
75V
1,7V
R1
1M
R7
2K2
C1
50µF
C2
100K
R4
1M
R5
220K
R31
1M
+3
SK3
R30
1M
R35
330K
R36
8K2
SK4
C3
22K
C8
820
R12
560K
C4
68K
B2
ECC83
130V
1,3V
R9
2K2
R34
6K8
C6
6K8
C23
12K
R10
3K3
L1
C24
8K2
R11
100
SK1
R14
100K
R15
270K
R16
1M
R54
390K
C10
22K
C7
680
R57
6M8
C9
15K
R13
220K
R17
10M
B2'
110V
STEREO
C11
100K
R16
220K
+2
Bu7
R51
120K
R50
10K
SK8
R56
56K
R33
56K
C20
330
C22
15K
SK2
R6
470K
SK10
C25
30
C12
30
K1
K101
R21
470
K2
K102
C27
220K
L2
C13
68K
C14
220
R22
1M
Bu5
Bu6
R52
68K
R53
100K
C15
22K
260V
B3
ECL82
200V
R23
1K
R32
10K
R55
10K
C26
125µF
R24
560
C16
50µF
Re1
SK9
T2
S1
S2
S1'
S2'
Bu4
SK6
Bu5
B3'
R28
820K
R18
2K2
C17
15K
R26
470K
40V
250V
B4
EM81
220V
250V
R25
33K
R27
2K2
Re2
Re1
C18
50+32+32µF
280V
B5
EZ80
T1
S4
S4'
S3
S3'
S2
S2'
VL1
50Hz
60Hz
M1
SK7
~